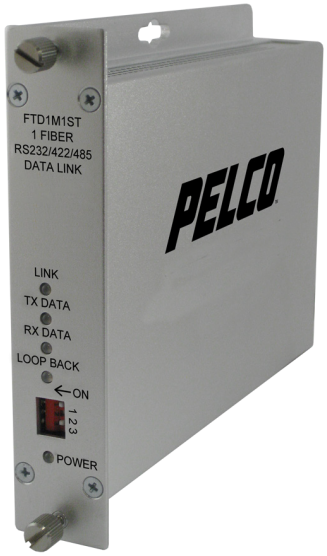

INSTALLATION AND OPERATION MANUAL

FTD/FRD1(M,S)1(ST,FC)

RS232/RS422/RS485 DATA TRANSCEIVER

The FTD/FRD1(M,S)1(ST,FC) data transceivers provide point-to-point transmission of simplex or duplex EIA RS232/RS422/RS485 (2W/4W) data signals over one optical fiber. The transceivers are transparent to data encoding allowing for broad-range compatibility. Models within this series are available for use with multimode or single mode optical fiber.

Each transceiver incorporates a bi-color (Red/Green) indicating LED for monitoring proper system operation. See **Figure 4** on **Page 3** for LED Indicator explanations.

The FTD/FRD1(M,S)1(ST,FC) has a built-in fiber link test feature that allows for the testing of the fiber. See **Figure 8** on **Page 5** for an explanation of the Loop Back Test Mode.

The FTD/FRD1(M,S)1(ST,FC) units are interchangeable between stand-alone or card mount configurations. See **Figure A** on **Page 6** for mounting instructions.

See **Figures 1 – 8** for complete installation details.

IMPORTANT SAFETY INSTRUCTIONS

1. Read these instructions.
2. Keep these instructions.
3. Heed all warnings.
4. Follow all instructions.
5. Do not use this apparatus near water.
6. Clean only with dry cloth.
7. Do not block any ventilation openings. Install in accordance with the manufacturer's instructions.
8. Do not install near any heat sources such as radiators, heat registers, stoves, or other apparatus (including amplifiers) that produce heat.
9. Do not defeat the safety purpose of the polarized or grounding-type plug. A polarized plug has two blades with one wider than the other. A grounding type plug has two blades and a third grounding prong. The wide blade or the third prong are provided for your safety. If the provided plug does not fit into your outlet consult an electrician for replacement of the obsolete outlet.
10. Protect the power cord from being walked on or pinched particularly at plugs, convenience receptacles, and the points where they exit from the apparatus.
11. Only use attachments/accessories specified by the manufacturer.
12. Use only with the cart, stand, tripod, bracket, or table specified by the manufacturer, or sold with the apparatus. When a cart is used, use caution when moving the cart/apparatus combination to avoid injury from tip-over.
13. Refer all servicing to qualified service personnel. Servicing is required when the apparatus has been damaged in any way, such as power-supply cord or plug is damaged, liquid has been spilled or objects have fallen into the apparatus, the apparatus has been exposed to rain or moisture, does not operate normally, or has been dropped.
14. Apparatus shall not be exposed to dripping or splashing and that no objects filled with liquids, such as vases shall be placed on the apparatus.
15. **WARNING:** To reduce the risk of fire or electric shock, do not expose this apparatus to rain or moisture.
16. Installation should be done only by qualified personnel and conform to all local codes.
17. Unless the unit is specifically marked as a NEMA Type 3, 3R, 3S, 4, 4X, 6, or 6P enclosure, it is designed for indoor use only and it must not be installed where exposed to rain and moisture.
18. Use only installation methods and materials capable of supporting four times the maximum specified load.
19. A CCC-approved power cord must be used to power this equipment when used in China.
20. **CAUTION:** These servicing instructions are for use by qualified service personnel only. To reduce the risk of electric shock do not perform any servicing other than that contained in the operating instructions unless you are qualified to do so.

The product and/or manual may bear the following marks:

⚠ This symbol indicates that dangerous voltage constituting a risk of electric shock is present within this unit.

⚠ This symbol indicates that there are important operating and maintenance instructions in the literature accompanying this unit.

CAUTION:

RISK OF ELECTRIC SHOCK.

DO NOT OPEN.

FIGURE 1 – FTD/FRD1(M,S)1(ST,FC) DATA TRANSCEIVER

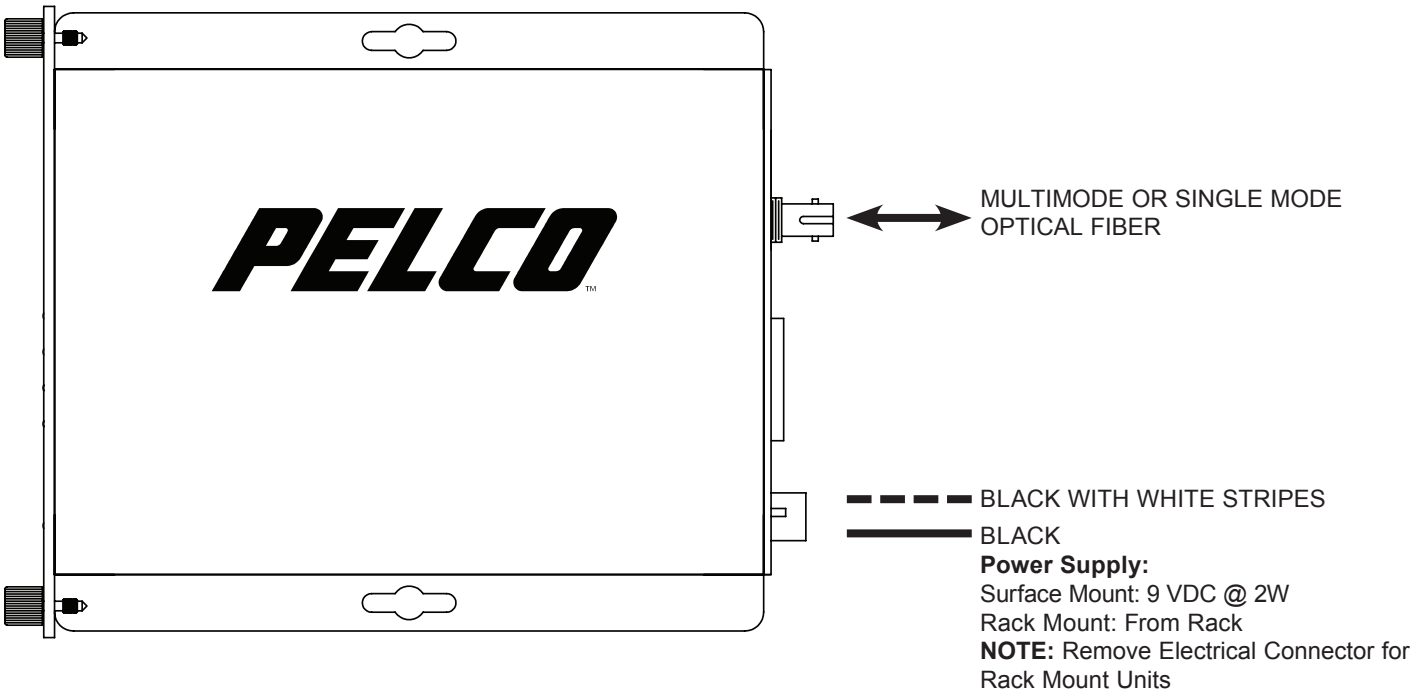

FIGURE 2 – TRANSMITTER

FRONT PANEL REAR PANEL

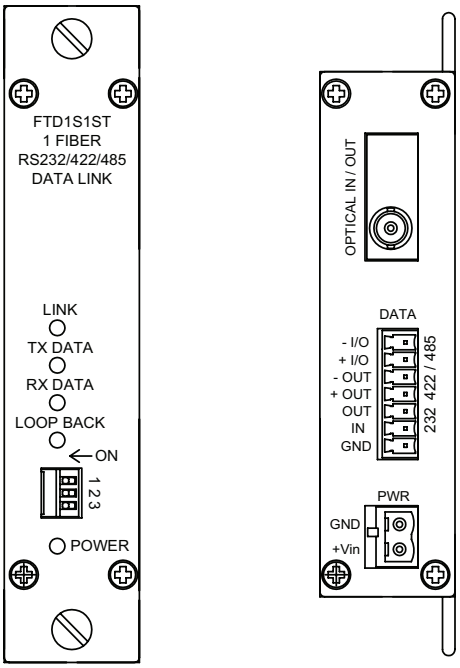

FIGURE 3 – RECEIVER

FRONT PANEL REAR PANEL

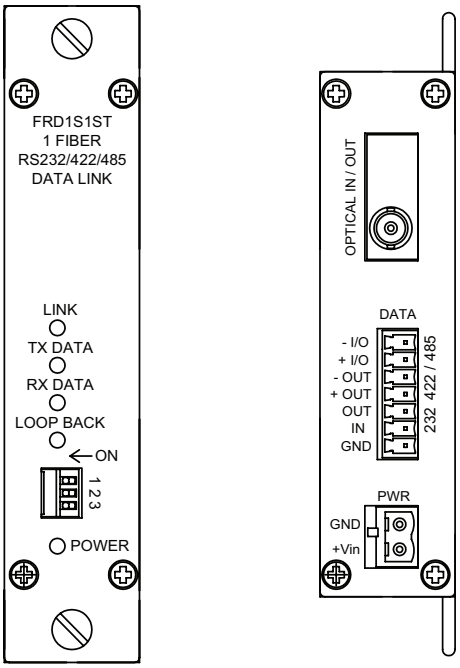

FIGURE 4 – LED INDICATORS

	LINK	DATA (TX/RX)	LOOP BACK (Test Mode)	POWER
GREEN	Unit In Sync	Activity	Fiber Link Connections are Correct	Unit Powered Up
RED	Unit Not In Sync	No Acvitiy	Fiber Link Issue Exists (Head End)	–
OFF	No Optical Link	–	Fiber Link Issue Exists (Far End); OR Test Mode is Off	Unit Powered Down

FIGURE 5 – SWITCH POSITIONS

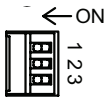

Switch
Located on front panel in full size modules and on back on small size modules.

The first two switches set the data type, the third toggles Loop Back Test Mode.

RS232 Data

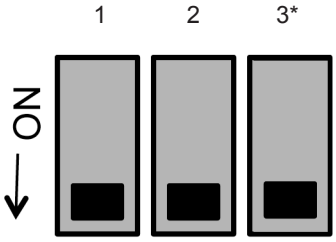

RS422, Bi-Phase or Manchester Data

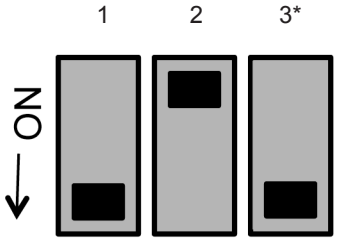

RS485 2-Wire, Sensornet Data

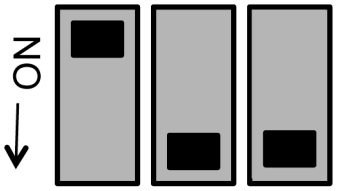

RS485 4-Wire Data

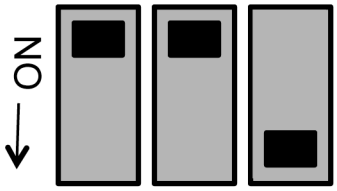

Loop Back Test

* Loop Back Test Mode
(see Page 8)

FIGURE 6 – DATA CONNECTIONS

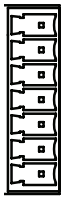

FIGURE 7 – DATA SETTINGS

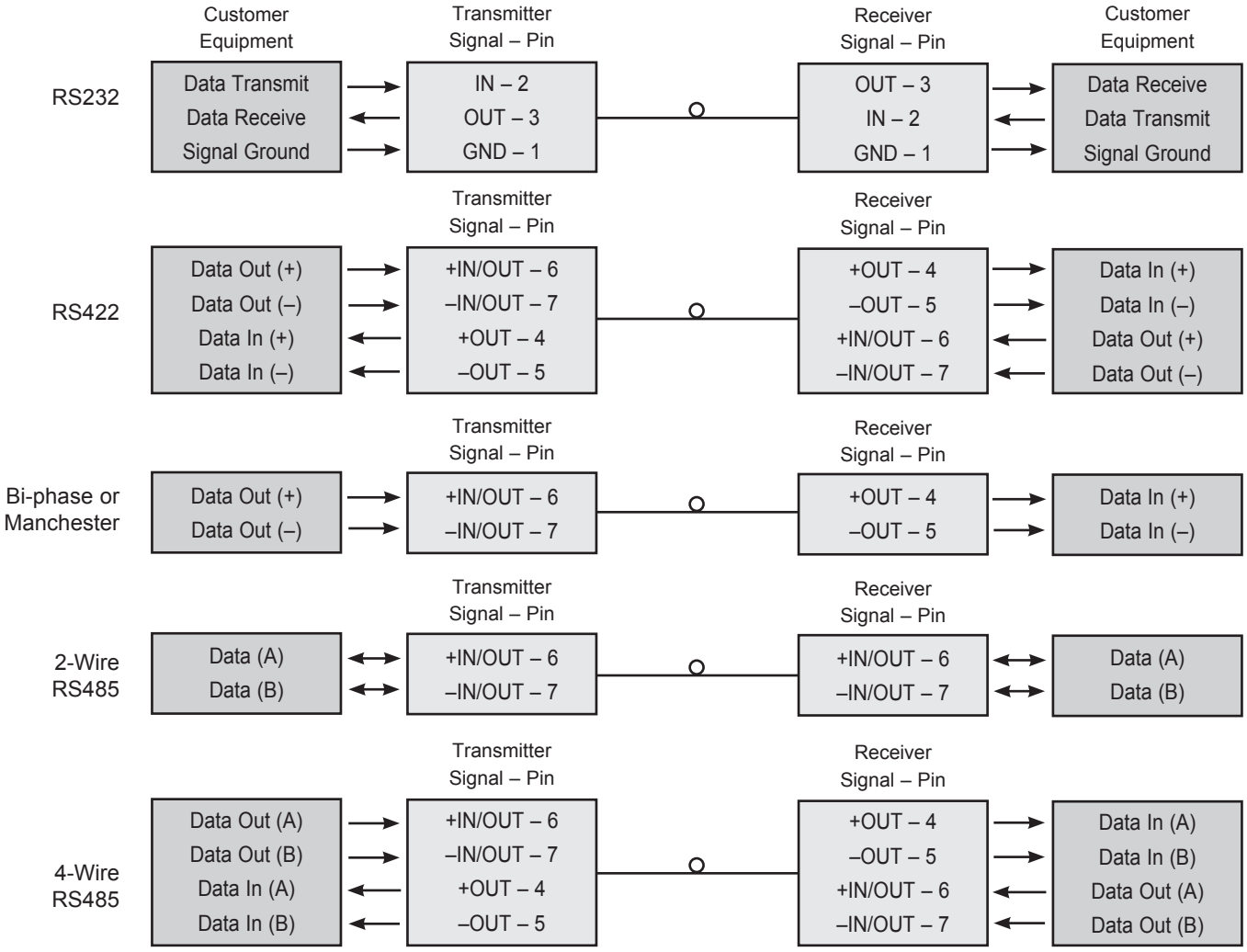

FIGURE 8 – LOOP BACK TEST MODE

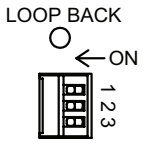

1. On one end (Head End), put unit into Loop Back Mode by setting Switch 3 to “OFF.” Switch 1 and 2 can be in any position. Data will not pass during Loop Back Test, LEDs may flash if data is sent during Loop Back Test.

2. If the Far End unit is powered on and the fiber link connections are correct, the Far End unit Loop Back LED will light GREEN.

3. If the Head End unit has Switch 3 in the “ON” position, and if there is a fiber link issue, then the Far End unit Loop Back LED will remain OFF. This is an error condition.

4. If the Far End unit Loop Back LED is GREEN and the fiber link and optical connections back to the Head End unit are correct, then the Head End unit Loop Back LED will light GREEN.

5. If there is a fiber link issue from the Far End back to the Head End, or the Far End unit is not working, the Head End unit Loop Back LED will light RED when the Loop Back switch is set to OFF. This is an error condition.

6. When not in Loop Back Test Mode the Loop Back LED on both ends will be OFF.

MECHANICAL INSTALLATION INSTRUCTIONS

INSTALLATION CONSIDERATIONS

This fiber-optic link is supplied as a Standalone/Rack module. Units should be installed in dry locations protected from extremes of temperature and humidity.

CARD CAGE RACKS

CAUTION: Although the units are hot-swappable and may be installed without turning power off to the rack, the manufacturer recommends that the power supply be turned off and that the rack power supply is disconnected from any power source. **Note:** Remove electrical connector before installing in card cage rack.

1. Make sure that the card is oriented right side up, and slide it into the card guides in the rack until the edge connector at the back of the card seats in the corresponding slot in the rack's connector panel. Seating may require thumb pressure on the top and bottom of the card's front panel.

CAUTION: Take care not to press on any of the LEDs.

2. Tighten the two thumb screws on the card until the front panel of the card is seated against the front of the rack.

WARNING: Unit is to be used with a Listed Class 2 or LPS power supply.

IMPORTANT SAFEGUARDS:

A) Elevated Operating Ambient - If installed in a closed or multi-unit rack assembly, the operating ambient temperature of the rack environment may be greater than room ambient. Therefore, consideration should be given to installing the equipment in an environment compatible with the maximum ambient temperature (Tma) specified by the manufacturer.

B) Reduced Air Flow - Installation of the equipment in a rack should be such that the amount of air flow required for safe operation of the equipment is not compromised.

FIGURE A

Dimensions are for a standard one slot module

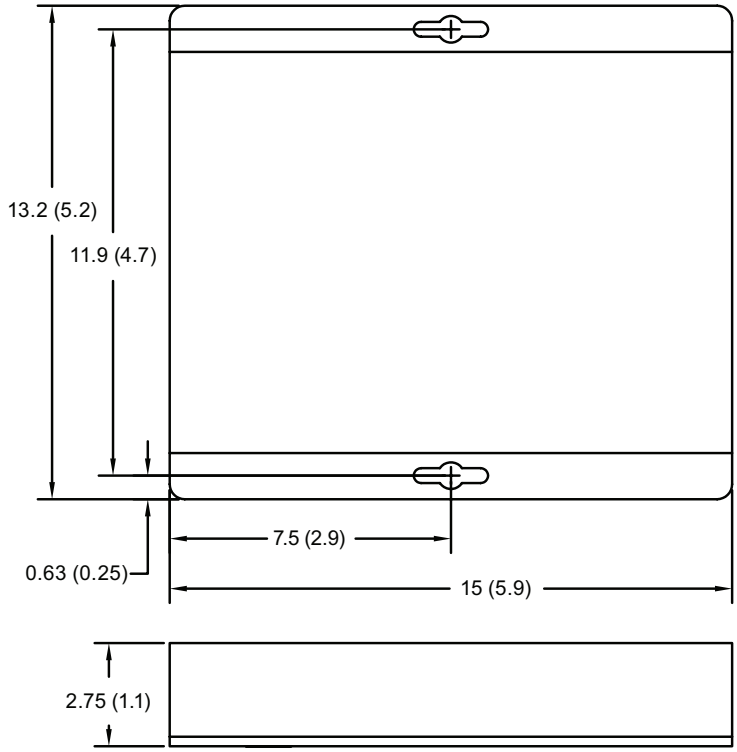

PRODUCT WARRANTY AND RETURN INFORMATION

WARRANTY

Pelco will repair or replace, without charge, any merchandise proved defective in material or workmanship **for a period of one year** after the date of shipment.

Exceptions to this warranty are as noted below:

- Five years:
  - Fiber optic products
  - Unshielded Twisted Pair (UTP) transmission products
  - CC3701H-2, CC3701H-2X, CC3751H-2, CC3651H-2X, MC3651H-2, and MC3651H-2X camera models
- Three years:
  - FD Series and BU Series analog camera models
  - Fixed network cameras and network dome cameras with Sarix® technology
  - Sarix thermal imaging products (TI and ESTI Series)
  - Fixed analog camera models (C20 Series, CCC1390H Series, C10DN Series, and C10CH Series)
  - EH1500 Series enclosures
  - Spectra® IV products (including Spectra IV IP)
  - Spectra HD dome products
  - Camclosure® IS Series integrated camera systems
  - DX Series video recorders (except DX9000 Series which is covered for a period of one year), DVR5100 Series digital video recorders, Digital Sentry® Series hardware products, DVX Series digital video recorders, and NVR300 Series network video recorders
  - Endura® Series distributed network-based video products
  - Genex® Series products (multiplexers, server, and keyboard)
  - PMCL200/300/400 Series LCD monitors
  - PMCL5xxF Series and PMCL5xxNB Series LCD monitors
- Two years:
  - Standard varifocal, fixed focal, and motorized zoom lenses
  - DF5/DF8 Series fixed dome products
  - Legacy® Series integrated positioning systems
  - Spectra III™, Spectra Mini, Spectra Mini IP, Esprit®, ExSite®, ExSite IP, and PS20 scanners, including when used in continuous motion applications
  - Esprit Ti and TI2500 Series thermal imaging products
  - Esprit and WW5700 Series window wiper (excluding wiper blades)
  - CM6700/CM6800/CM9700 Series matrix
  - Digital Light Processing (DLP®) displays (except lamp and color wheel). The lamp and color wheel will be covered for a period of 90 days. The air filter is not covered under warranty.
- Six months:
  - All pan and tilts, scanners, or preset lenses used in continuous motion applications (preset scan, tour, and auto scan modes)

Pelco will warrant all replacement parts and repairs for 90 days from the date of Pelco shipment. All goods requiring warranty repair shall be sent freight prepaid to a Pelco designated location. Repairs made necessary by reason of misuse, alteration, normal wear, or accident are not covered under this warranty.

Pelco assumes no risk and shall be subject to no liability for damages or loss resulting from the specific use or application made of the Products. Pelco's liability for any claim, whether based on breach of contract, negligence, infringement of any rights of any party or product liability, relating to the Products shall not exceed the price paid by the Dealer to Pelco for such Products. In no event will Pelco be liable for any special, incidental, or consequential damages (including loss of use, loss of profit, and claims of third parties) however caused, whether by the negligence of Pelco or otherwise.

The above warranty provides the Dealer with specific legal rights. The Dealer may also have additional rights, which are subject to variation from state to state.

If a warranty repair is required, the Dealer must contact Pelco at (800) 289-9100 or (559) 292-1981 to obtain a Repair Authorization number (RA), and provide the following information:

1. Model and serial number
2. Date of shipment, P.O. number, sales order number, or Pelco invoice number
3. Details of the defect or problem

If there is a dispute regarding the warranty of a product that does not fall under the warranty conditions stated above, please include a written explanation with the product when returned.

Method of return shipment shall be the same or equal to the method by which the item was received by Pelco.

RETURNS

To expedite parts returned for repair or credit, please call Pelco at (800) 289-9100 or (559) 292-1981 to obtain an authorization number (CA number if returned for credit, and RA number if returned for repair) and designated return location.

All merchandise returned for credit may be subject to a 20 percent restocking and refurbishing charge.

Goods returned for repair or credit should be clearly identified with the assigned CA or RA number and freight should be prepaid.

Revised 1-12-12

This equipment contains electrical or electronic components that must be recycled properly to comply with Directive 2002/96/EC of the European Union regarding the disposal of waste electrical and electronic equipment (WEEE). Contact your local dealer for procedures for recycling this equipment.

Pelco, the Pelco logo, and other trademarks associated with Pelco products referred to in this publication are trademarks of Pelco, Inc. or its affiliates.
All other product names and services are the property of their respective companies.
Product specifications and availability are subject to change without notice.

© Copyright 2012, Pelco, Inc.
All rights reserved.

www.pelco.com

Pelco, Inc. 625 W. Alluvial, Fresno, California 93711 United States
USA & Canada Tel (800) 289-9100 Fax (800) 289-9150
International Tel +1 (559) 292-1981 Fax +1 (559) 348-1120