INSTALLATION AND OPERATION MANUAL

FMCI-PF1/PF1M/PF2

10/100MBPS 2 PORT ETHERNET MEDIA CONVERTER
1 CHANNEL: ELECTRICAL TO FSFP OPTICAL
2 CHANNELS: ELECTRICAL TO FSFP OPTICAL

This manual serves the following Model Numbers:

FMCI-PF1M

FMCI-PF1

FMCI-PF2

The FMCI-PF1[M] 2 port Ethernet media converter and FMCI-PF2 dual 2 port are designed to transmit and receive 10/100Mbps data over optical fiber through user selectable FSFP options.

These models require the ordering of sold-separately interchangeable FSFP modules for fiber type, distance and connectors. See instructions included with FSFP for installation of selected module.

The FMCI-PF1 and FMCI-PF1M each transmit and receive a single channel of Ethernet data and the FMCI-PF2 transmits and receives two independent channels in one unit. The electrical interface will Auto-Negotiate to a 10Mbps, or 100Mbps Ethernet rate without any adjustments. The optical interface operates at a 100Mbps Ethernet rate. Both are environmentally hardened to operate in extreme temperatures.

LED indicators are provided for confirming equipment operating status. See **Figure 7** on **Page 6** for LED indicator descriptions.

See **Figures 1 – 8** for complete installation details.

The FMCI-PF1 and FMCI-PF2 standard size units may be directly plugged into the Pelco Rack (Part EU-RACK or US-RACK) or operated as standalone modules. The FMCI-PF1M small size unit operates as standalone module only. See **Page 7** for mounting instructions.

IMPORTANT SAFETY INSTRUCTIONS

1. Read these instructions.
2. Keep these instructions.
3. Heed all warnings.
4. Follow all instructions.
5. Do not use this apparatus near water.
6. Clean only with dry cloth.
7. Do not block any ventilation openings. Install in accordance with the manufacturer's instructions.
8. Do not install near any heat sources such as radiators, heat registers, stoves, or other apparatus (including amplifiers) that produce heat.
9. Do not defeat the safety purpose of the polarized or grounding-type plug. A polarized plug has two blades with one wider than the other. A grounding type plug has two blades and a third grounding prong. The wide blade or the third prong are provided for your safety. If the provided plug does not fit into your outlet consult an electrician for replacement of the obsolete outlet.
10. Protect the power cord from being walked on or pinched particularly at plugs, convenience receptacles, and the points where they exit from the apparatus.
11. Only use attachments/accessories specified by the manufacturer.
12. Use only with the cart, stand, tripod, bracket, or table specified by the manufacturer, or sold with the apparatus. When a cart is used, use caution when moving the cart/apparatus combination to avoid injury from tip-over.
13. Refer all servicing to qualified service personnel. Servicing is required when the apparatus has been damaged in any way, such as power-supply cord or plug is damaged, liquid has been spilled or objects have fallen into the apparatus, the apparatus has been exposed to rain or moisture, does not operate normally, or has been dropped.
14. Apparatus shall not be exposed to dripping or splashing and that no objects filled with liquids, such as vases shall be placed on the apparatus.
15. **WARNING:** To reduce the risk of fire or electric shock, do not expose this apparatus to rain or moisture.
16. Installation should be done only by qualified personnel and conform to all local codes.
17. Unless the unit is specifically marked as a NEMA Type 3, 3R, 3S, 4, 4X, 6, or 6P enclosure, it is designed for indoor use only and it must not be installed where exposed to rain and moisture.
18. Use only installation methods and materials capable of supporting four times the maximum specified load.
19. A CCC-approved power cord must be used to power this equipment when used in China.
20. **CAUTION:** These servicing instructions are for use by qualified service personnel only. To reduce the risk of electric shock do not perform any servicing other than that contained in the operating instructions unless you are qualified to do so.

The product and/or manual may bear the following marks:

This symbol indicates that dangerous voltage constituting a risk of electric shock is present within this unit.

This symbol indicates that there are important operating and maintenance instructions in the literature accompanying this unit.

CAUTION:

RISK OF ELECTRIC SHOCK.

DO NOT OPEN.

FIGURE 1 – FMCI-PF1 STANDARD SIZE UNIT

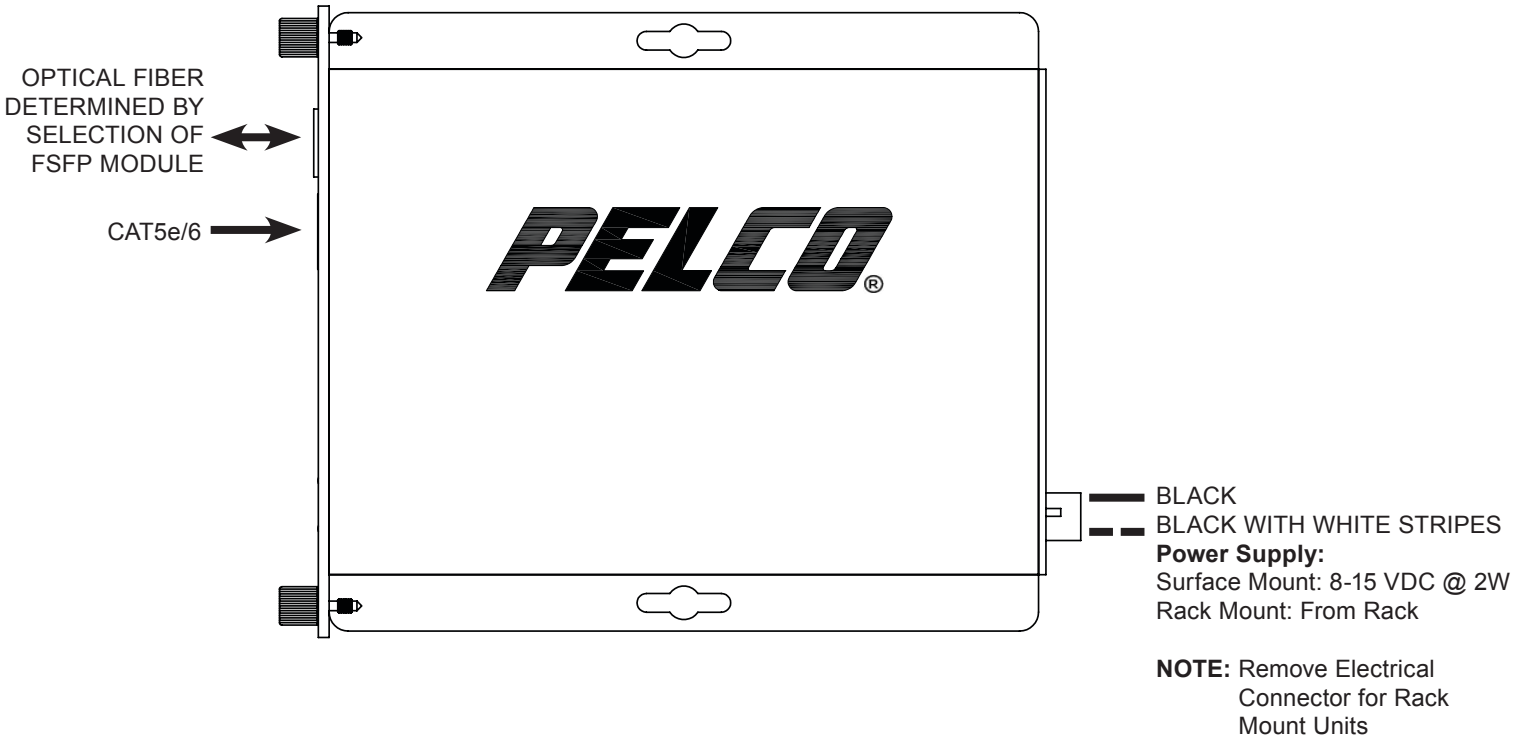

FIGURE 2 – FMCI-PF1 STANDARD SIZE UNIT

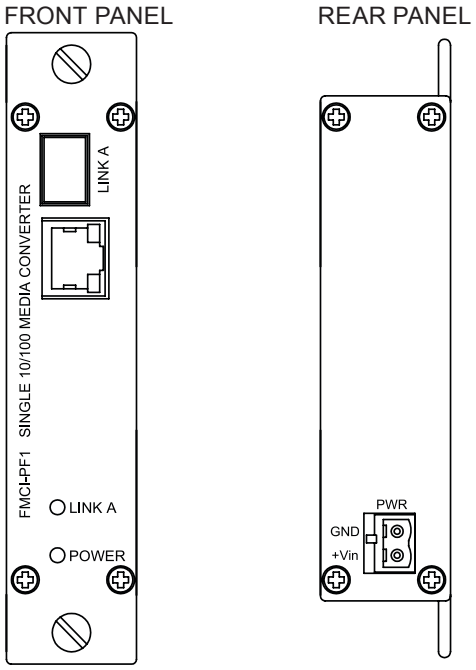

FIGURE 3 – FMCI-PF1M SMALL SIZE UNIT

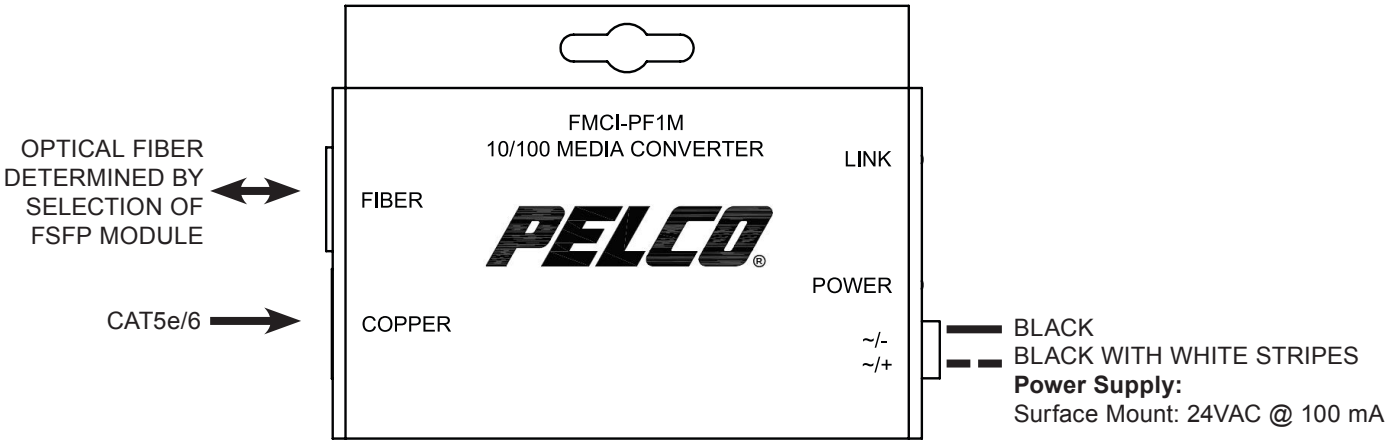

FIGURE 4 – FMCI-PF1M SMALL SIZE UNIT

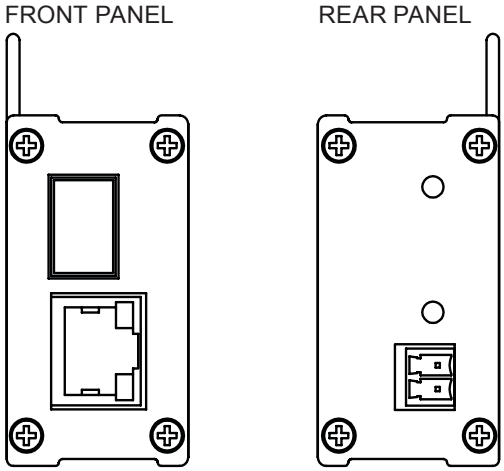

FIGURE 5 – FMCI-PF2 STANDARD SIZE UNIT

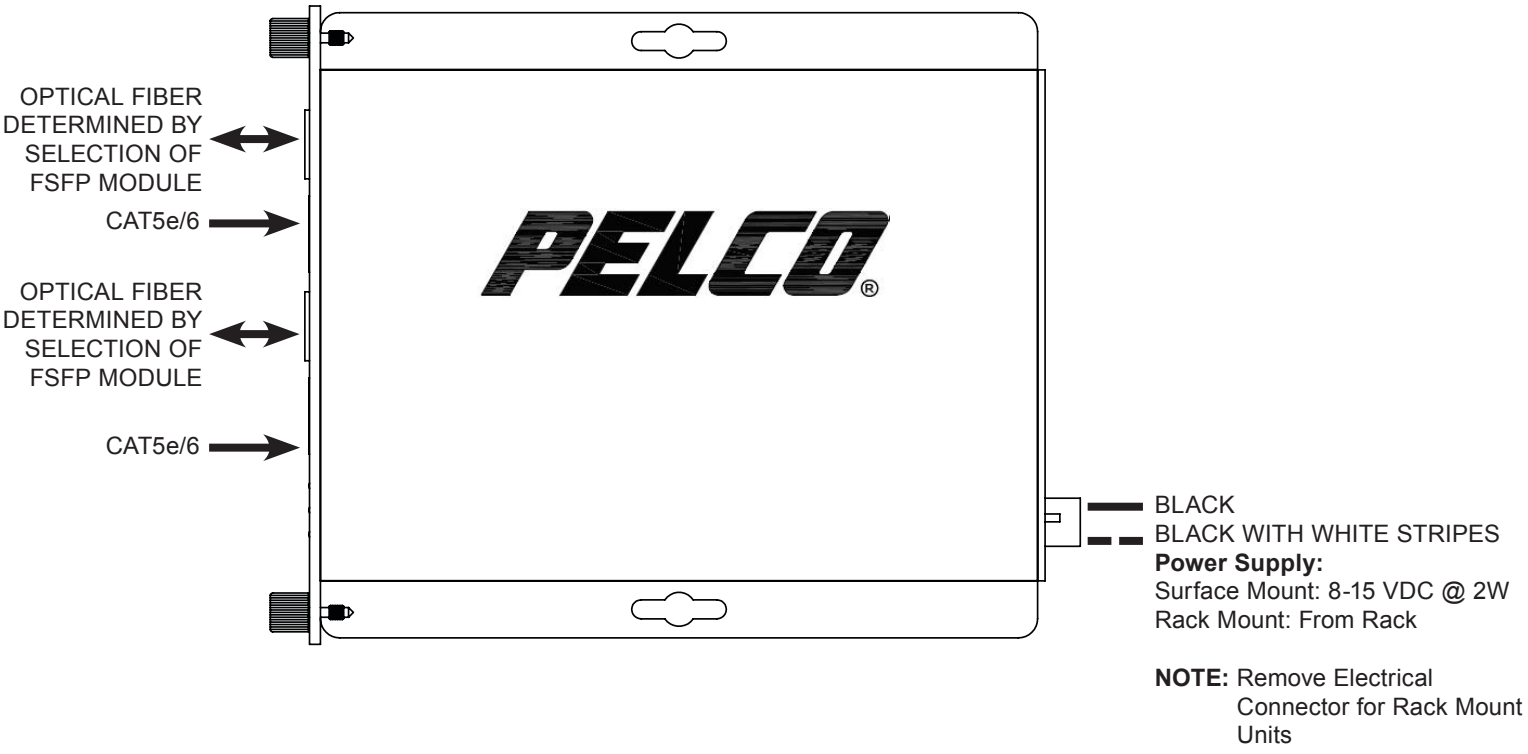

FIGURE 6 – FMCI-PF2 STANDARD SIZE UNIT

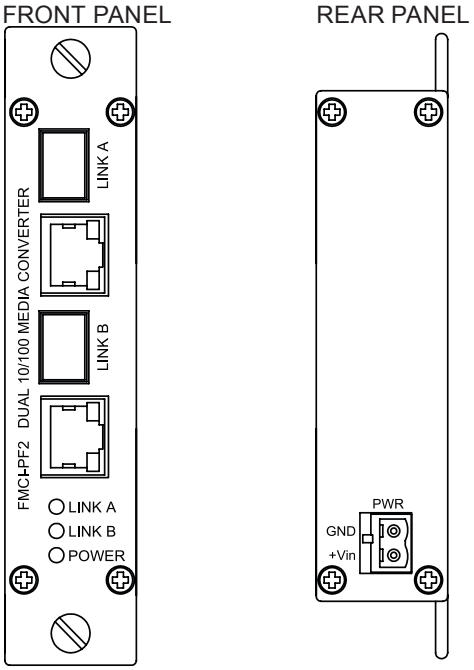

FIGURE 7 – LED INDICATORS

	LINK (A or B)	RJ45	POWER
GREEN	Solid – No Activity Blinking – Activity	Solid – No Activity Blinking – Activity	Unit powered up
YELLOW	Highest Data Rate (Full Size Units Only)	Highest Data Rate	–
OFF	No Link	No Link	Unit powered down

FIGURE 8 – POSSIBLE ETHERNET CONFIGURATION

Ethernet IEEE 802.3 Network Element determined by user.

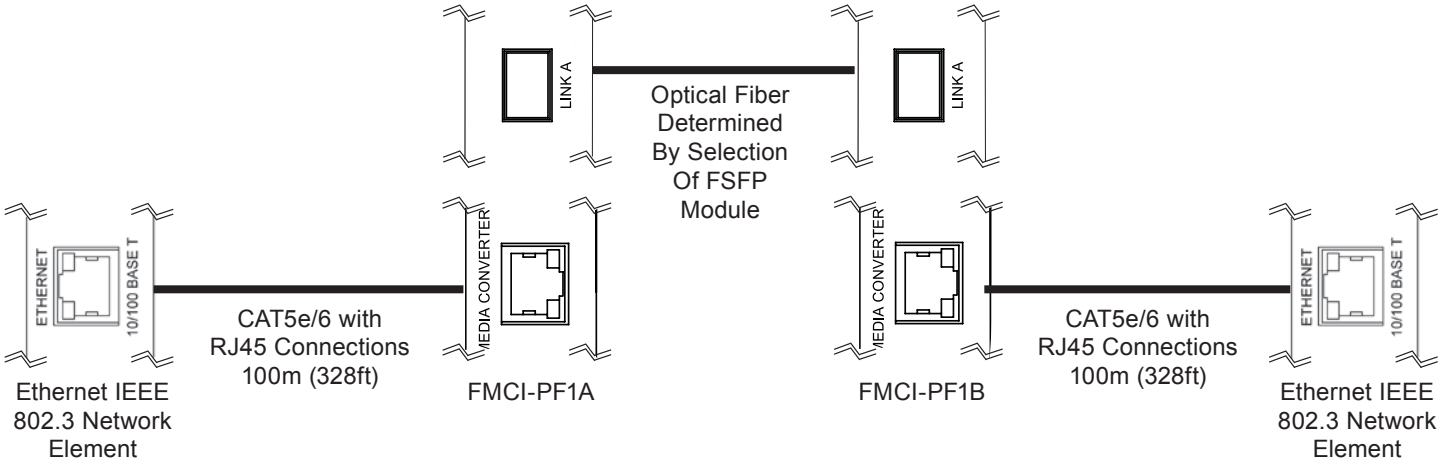

MECHANICAL INSTALLATION INSTRUCTIONS

INSTALLATION CONSIDERATIONS

The FMCI-PF1 and FMCI-PF2 media converters are supplied as Standalone/Rack modules. The FMCI-PF1M media converter is supplied as a standalone module. Units should be installed in dry locations protected from extremes of temperature and humidity.

CARD CAGE RACKS

CAUTION: Although the units are hot-swappable and may be installed without turning power off to the rack, the manufacturer recommends that the power supply be turned off and that the rack power supply is disconnected from any power source. Note: Remove electrical connector before installing in card cage rack.

1. Make sure that the card is oriented right side up, and slide it into the card guides in the rack until the edge connector at the back of the card seats in the corresponding slot in the rack's connector panel. Seating may require thumb pressure on the top and bottom of the card's front panel.

CAUTION: Take care not to press on any of the LEDs.

2. Tighten the two thumb screws on the card until the front panel of the card is seated against the front of the rack.

WARNING: Unit is to be used with a Listed Class 2 power supply.

IMPORTANT SAFEGUARDS:

A) Elevated Operating Ambient - If installed in a closed or multi-unit rack assembly, the operating ambient temperature of the rack environment may be greater than room ambient. Therefore, consideration should be given to installing the equipment in an environment compatible with the maximum ambient temperature (Tma) specified by the manufacturer.

B) Reduced Air Flow - Installation of the equipment in a rack should be such that the amount of air flow required for safe operation of the equipment is not compromised.

FIGURE A

Dimensions are for a standard one slot module

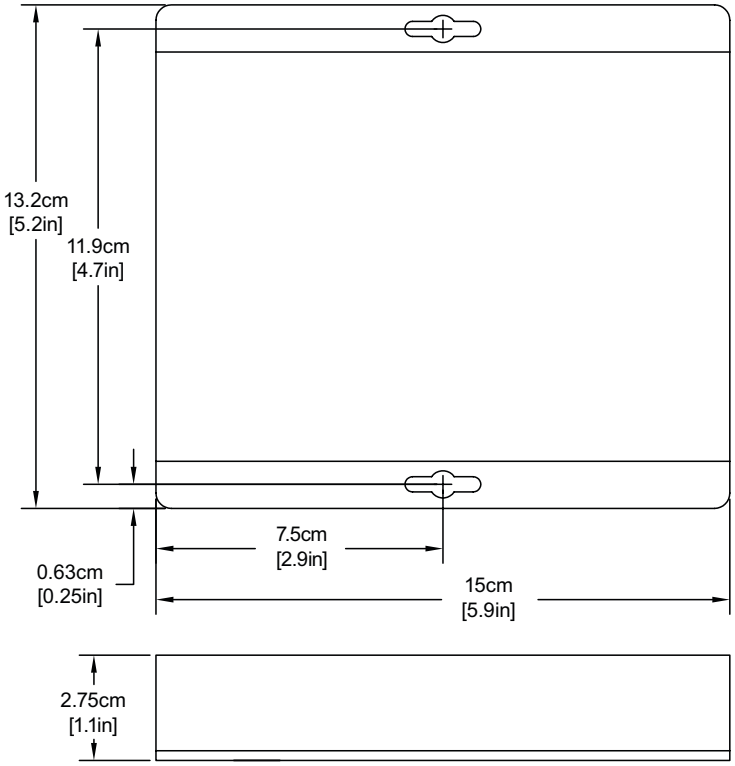

FIGURE B

Dimensions are for a medium size module

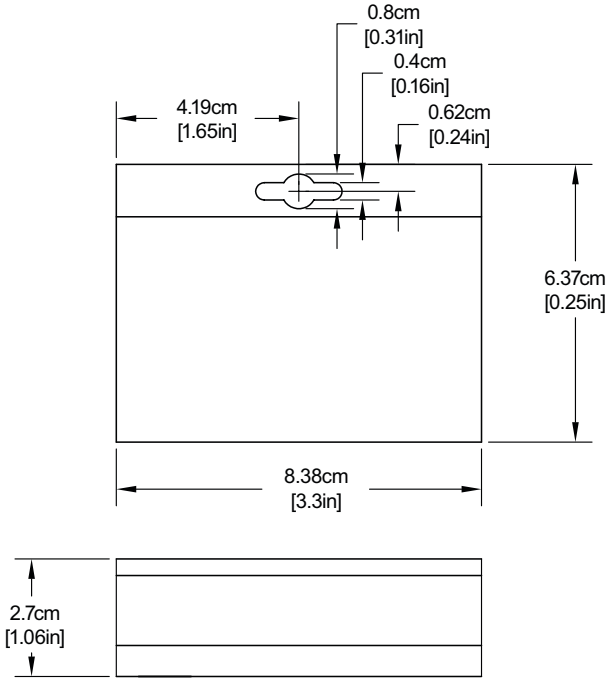

PRODUCT WARRANTY AND RETURN INFORMATION

WARRANTY

Pelco will repair or replace, without charge, any merchandise proved defective in material or workmanship **for a period of one year** after the date of shipment.

Exceptions to this warranty are as noted below:

- Five years:
  - Fiber optic products
  - Unshielded Twisted Pair (UTP) transmission products
  - CC3701H-2, CC3701H-2X, CC3751H-2, CC3651H-2X, MC3651H-2, and MC3651H-2X camera models
- Three years:
  - FD Series and BU Series analog camera models
  - Fixed network cameras and network dome cameras with Sarix® technology
  - Sarix thermal imaging products (TI and ESTI Series)
  - Fixed analog camera models (C20 Series, CCC1390H Series, C10DN Series, and C10CH Series)
  - EH1500 Series enclosures
  - Spectra® IV products (including Spectra IV IP)
  - Spectra HD dome products
  - Camclosure® IS Series integrated camera systems
  - DX Series video recorders (except DX9000 Series which is covered for a period of one year), DVR5100 Series digital video recorders, Digital Sentry® Series hardware products, DVX Series digital video recorders, and NVR300 Series network video recorders
  - Endura® Series distributed network-based video products
  - Genex® Series products (multiplexers, server, and keyboard)
  - PMCL200/300/400 Series LCD monitors
  - PMCL5xxF Series and PMCL5xxNB Series LCD monitors
  - PMCL5xxxBL Series LED monitors
- Two years:
  - Standard varifocal, fixed focal, and motorized zoom lenses
  - DF5/DF8 Series fixed dome products
  - Legacy® Series integrated positioning systems
  - Spectra III™, Spectra Mini, Spectra Mini IP, Esprit®, ExSite®, ExSite IP, and PS20 scanners, including when used in continuous motion applications
  - Esprit Ti and TI2500 Series thermal imaging products
  - Esprit and WW5700 Series window wiper (excluding wiper blades)
  - CM6700/CM6800/CM9700 Series matrix
  - Digital Light Processing (DLP®) displays (except lamp and color wheel). The lamp and color wheel will be covered for a period of 90 days. The air filter is not covered under warranty.
- Six months:
  - All pan and tilts, scanners, or preset lenses used in continuous motion applications (preset scan, tour, and auto scan modes)

Pelco will warrant all replacement parts and repairs for 90 days from the date of Pelco shipment. All goods requiring warranty repair shall be sent freight prepaid to a Pelco designated location. Repairs made necessary by reason of misuse, alteration, normal wear, or accident are not covered under this warranty.

Pelco assumes no risk and shall be subject to no liability for damages or loss resulting from the specific use or application made of the Products. Pelco's liability for any claim, whether based on breach of contract, negligence, infringement of any rights of any party or product liability, relating to the Products shall not exceed the price paid by the Dealer to Pelco for such Products. In no event will Pelco be liable for any special, incidental, or consequential damages (including loss of use, loss of profit, and claims of third parties) however caused, whether by the negligence of Pelco or otherwise.

The above warranty provides the Dealer with specific legal rights. The Dealer may also have additional rights, which are subject to variation from state to state.

If a warranty repair is required, the Dealer must contact Pelco at (800) 289-9100 or (559) 292-1981 to obtain a Repair Authorization number (RA), and provide the following information:

1. Model and serial number
2. Date of shipment, P.O. number, sales order number, or Pelco invoice number
3. Details of the defect or problem

If there is a dispute regarding the warranty of a product that does not fall under the warranty conditions stated above, please include a written explanation with the product when returned.

Method of return shipment shall be the same or equal to the method by which the item was received by Pelco.

RETURNS

To expedite parts returned for repair or credit, please call Pelco at (800) 289-9100 or (559) 292-1981 to obtain an authorization number (CA number if returned for credit, and RA number if returned for repair) and designated return location.

All merchandise returned for credit may be subject to a 20 percent restocking and refurbishing charge.

Goods returned for repair or credit should be clearly identified with the assigned CA or RA number and freight should be prepaid.

Revised 10-9-12

This equipment contains electrical or electronic components that must be recycled properly to comply with Directive 2002/96/EC of the European Union regarding the disposal of waste electrical and electronic equipment (WEEE). Contact your local dealer for procedures for recycling this equipment.

Pelco, the Pelco logo, and other trademarks associated with Pelco products referred to in this publication are trademarks of Pelco, Inc. or its affiliates.
ONVIF and the ONVIF logo are trademarks of ONVIF Inc. All other product names and services are the property of their respective companies.
Product specifications and availability are subject to change without notice.

© Copyright 2013, Pelco, Inc.
All rights reserved.

Pelco, Inc. 625 W. Alluvial, Fresno, California 93711 United States
USA & Canada Tel (800) 289-9100 Fax (800) 289-9150
International Tel +1 (559) 292-1981 Fax +1 (559) 348-1120
www.pelco.com www.pelco.com/community